www.rockschool.au

RockSchool Equipment Catalogue

Item Name: Offset D Screw Gate Karabiner

Item Colour: Silver / Black

Item Code: ODSC-nnn

Item Name: Offset D Auto Lock Karabiner

Item Colour: Gold

Item Code: ODA-nnn

Item Name: Bulletproof Screw Gate Karabiner

Item Colour: Gray

Item Code: ODB-nnn

Bulletproof Screw Gate Karabiner (cont'd)

Specifications

•Fmax. major axis: 25 kN
•Fmax. open : 9 kN
•Fmax. minor axis : 9 kN
•Width: 89 mm
•Gate opening: 24 mm
•Certification : EN 12275
•Certification : EN 362
•Material : Aluminium/Steel
•Bulletproof : Yes
•Closure : Screw
•Carabiner shape : HMS

DETAILS

- Keylock closure system on upper carabiner for optimal handling when clipping and unclipping
- H-profile construction ensures best possible use of material and minimal weight
- Steel insert prevents premature wear from rope friction or bolt hangers

Manufacturer's website: https://edelrid.com/int-en/professional/connectors-shop/hms-bulletproof-screw-st

Item Name: Equal D Screw Gate Karabiner

Item Colour: Silver / Gold

Item Code: EDSC-nnn

Item Name: Oval Screw Gate Karabiner

Item Colour: Silver

Item Code: OSC-nnn

Item Name: Figure 8 Descender

Item Colour: various

Item Code: FIG8-nnn

Figure 8 Descender (cont'd)

SPECIFICATIONS

- Ropes: 8 - 13mm

Item Name: Rescue 8 Descender (small)

Item Colour: Red

Item Code: R8R-nnn

Rescue 8 Descender (cont'd)

Model	Weight g	Length mm	Width mm	Thickness Mm	Strength kg	Rope Range mm
R8S – Small Rescue 8	155	137	120	12	4000	8-13
R8L – Large Rescue 8	310	180	155	16	5000	8-16
R8A – Anchor 8	300	175	90	16	4000	8-11

Item Name: Rescue 8 Descender (large)

Item Colour: Black

Item Code: R8B-nnn

Item Name: Rescue 8 Descender - Harpoon (large)

Item Colour: Silver

Item Code: R8S-nnn

Item Name: Rap Rack Descender (3 bar)

Item Colour: Silver

Item Code: RK3-nnn

Rap Rack Descender - 3 bar (cont'd)

Model	Weight	Length	Width	Thickness	Body Strength	Bar Strength	Rope Range
DR6 – 6 Bar Rappel Rack	742g	260mm	55mm	21mm	5000kg	3000kg	9-13mm
DR5 – 5 Bar Rappel Rack	640g	225mm	55mm	21mm	5000kg	3000kg	9-13mm
DR4 – 4 Bar Rappel Rack	527g	150mm	55mm	21mm	5000kg	3000kg	9-13mm
DR3 – 3 Bar Rappel Rack	290g	150mm	55mm	21mm	5000kg	3000kg	9-13mm

Item Name: Rap Rack Descender (6 bar)

Item Colour: Silver

Item Code: RK6-nnn

Rap Rack Descender - 6 bar (cont'd)

Model	Weight	Length	Width	Thickness	Body Strength	Bar Strength	Rope Range
DR6 – 6 Bar Rappel Rack	742g	260mm	55mm	21mm	5000kg	3000kg	9-13mm
DR5 – 5 Bar Rappel Rack	640g	225mm	55mm	21mm	5000kg	3000kg	9-13mm
DR4 – 4 Bar Rappel Rack	527g	150mm	55mm	21mm	5000kg	3000kg	9-13mm
DR3 – 3 Bar Rappel Rack	290g	150mm	55mm	21mm	5000kg	3000kg	9-13mm

Item Name: Goldtail Descender (5 hole)

Item Colour: Gold

Item Code: GT5-nnn

Goldtail Descender (cont'd)

Model	Weight (g)	Length (mm)	Width (mm)	Thickness (mm)	Working Use Strength (kg)	Body Strength (kg)	Gate Strength (kg)	Rope Range (mm)
GTR5- 5 hole Rescue Goldtail	742	295	75	25	750	7000	750	9-13
GTR – 4 hole Rescue Goldtail	640	260	75	25	750	7000	750	9-13
GT16 – 3 hole Goldtail	527	210	75	25	750	7000	750	9-13

Item Name: Whaletail Descender (5 hole)

Item Colour: Silver

Item Code: WT-nnn

Item Name: Fisk Descender

Item Colour: Silver

Item Code: DESF-nnn

Item Name: Hydrobot Descender

Item Colour: Blue

Item Code: HYD-nnn

Hydrobot (cont'd)

Specifications

The possibility of overturning the central bar (fixed by a screw) allows the use by left-handers. The Kong Hydrobot is the only descender fitted with a magnet to retain the mobile bar!

Works on rope 9-11mm
Weight - 170grams

Manufacturer's website: https://www.kong.it/en/product/hydrobot/

Manual: KONG Hydrobot manual - page 1.jpg
KONG Hydrobot manual - page 2.jpg

Item Name: Piton

Item Colour: Black

Item Code: PIT-nnn

Item Name: GriGri Plus

Item Colour: Purple

Item Code: GRI-nnn

GriGri Plus (cont'd)

Specifications

- Weight: 200 g
- Rope compatibility: 8.5 to 11 mm single rope
- Material(s): Aluminum side plates, stainless steel friction plate, cam and wear plate, reinforced nylon handle
- Certification(s): CE EN 15151-1, UKCA, UIAA

Manufacturer's website: https://www.petzl.com/INT/en/Sport/Belay-devices-and-descenders/GRIGRI-PLUS

Technical notice/manual: PETZL Grigri Plus - technical notice.pdf

Inspection procedure: PETZL Grigri Plus - inspection procedure.pdf

Item Name: Sticht Plate Belay Device

Item Colour: Silver

Item Code: STP-nnn

Item Name: ATC Belay Device

Item Colour: Various

Item Code: ATC-nnn

ATC Belay Device (cont'd)

SPECIFICATIONS

- Rope Diameter Min (mm): Double 7.6 – 9
- Rope Diameter Max (mm): Single 8.9 – 11

Certification	EN 15151-2 UIAA 129

Item Name: Ovo Belay Device

Item Colour: Silver

Item Code: OVO-nnn

Ovo Belay Device (cont'd)

SPECIFICATIONS

- Rope Diameter Min: Double/Twin 8 - 9mm
- Rope Diameter Max:: Single 10 - 11mm
- CE: No
- UIAA: No
- Weight: 58g

Item Name: Full Rigging Plate / Ghost

Item Colour: Black

Item Code: RPT-nnn

Full Rigging Plate / Ghost (cont'd)

	Item	Standards	Material	(g)	Colour	Main dimension (mm)	Minimum rope diameter (mm)	Maximum rope diameter (mm)
	864N15400KK	/	Alu alloy	90	Black	125	8	12

Manufacturer's website: https://www.kong.it/en/product/full/

Technical notice/manual: KONG Full Rigging Plate - instructions.pdf

Item Name: PentaPlate Rigging Plate

Item Colour: Blue

Item Code: RPT-nnn

PentaPlate Rigging Plate (cont'd)

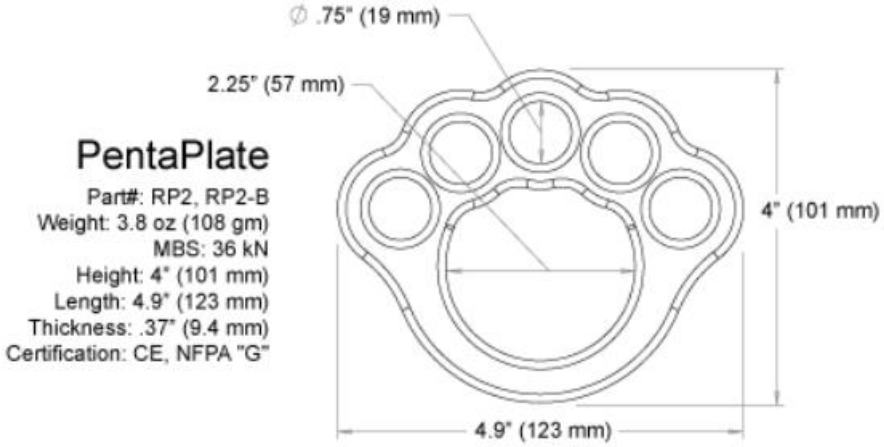

Specifications

Weight: 3.8 oz (108 gm)
MBS: 36 kN
Height: 4" (101 mm)
Width: 4.9" (123 mm)
Thickness: .37" (9.4 mm)
Certification: CE, NFPA "G"

Manufacturer's website: https://www.rockexotica.com/product/rigging-plates/pentaplate

Technical notice/manual: ROCK EXOTICA PentaPlate - technical notice.pdf

Item Name: Paw Small Rigging Plate

Item Colour: Gold

Item Code: RPT-nnn

Paw Small Rigging Plate (cont'd)

Specifications

- Weight: 60 g
- Breaking strength: 36 kN
- Material(s): aluminum
- Certification(s): CE, NFPA

Manufacturer's website: https://www.petzl.com/INT/en/Sport/Anchors/PAW-S

Technical notice/manual: PETZL Paw - technical notice.pdf

Inspection procedure: PETZL Paw - inspection procedure.pdf

Item Name: Maillon Rapide Pear Shaped

Item Colour: Silver

Item Code: MAIL-nnn

Maillon Rapide Pear Shaped (cont'd)

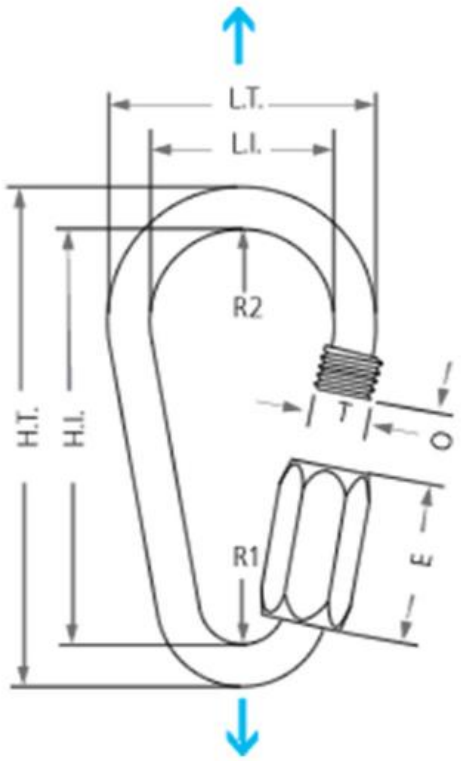

DETAILS

Pear shape: fitted with same nut opening as large opening quick links; its curved shape allows smooth connection of several parts together.

Reference	MRPZ10.0
Diameter (mm)	10
Diameter (inches)	7/16"
L.T. (mm)	63.5
L.I. (mm)	43.5
H.T. (mm)	118
H.I. (mm)	98
O (mm)	20.5
E (mm)	36
R1 (mm)	10.25
R2 (mm)	21.75
T (mm)	13
Weight (g)	183
WLL (kg)	720
BL (kg)	3600

*WLL: Working load limit
*BL: Breaking load.

Manufacturer's website: https://www.peguet.com/self-certified-maillon-rapide-quick-links/pear-shape-maillon-rapide

Item Name: Quick Link (8mm)

Item Colour: Silver

Item Code: QCK-nnn

Quick Link – 8mm (cont'd)

DETAILED DESCRIPTION

Ref.	Product name	Weight							Material	CE	
		g	oz	kN	kN	mm	mm	mm		EN 12275	EN 362
0939	OVAL QUICK LINK STAINLESS 8 mm	76	2.7	50	10	9	74	39	Stainless steel	Q	Q

Manufacturer's website: https://www.camp.it/d/us/us/outdoor/product/442

Item Name: Swivel

Item Colour: Black

Item Code: SWIV-nnn

Item Name: Pulley (1 wheel)

Item Colour: various

Item Code: PUL1-nnn

Item Name: Pulley (2 wheel)

Item Colour: Blue / Silver

Item Code: PUL2-nnn

Item Name: Wire Ladder

Item Colour: Gray

Item Code: LADW-nnn

Item Name: Titan Helmet (small)

Item Colour: Green
Red

Item Code: HELMS-nnnGR
HELMS-nnnR

Item Name: Titan Helmet (large)

Item Colour: White
Gray

Item Code: HELMS-nnnW
HELMS-nnnGY

Titan Helmet (cont'd)

Instructions for use: CAMP Titan Helmet - usage.pdf

General Information: CAMP Titan Helmet - general information.pdf

Specific Information: CAMP Titan Helmet - specific information.pdf

Item Name: Speedy Harness

Item Colour: Blue / Yellow / Gray

Item Code: HARS-nnn

Speedy Harness (cont'd)

Manufacturer's website: https://www.rockempire.cz/en/node/30

Technical notice/manual: ROCK EMPIRE Speedy Harness - directions for use.pdf

Instructions for use: ROCK EMPIRE Speedy Harness - instructions.pdf

Item Name: Children’s Full Body Harness

Item Colour: Red / Yellow

Item Code: HARB-nnn

Children’s Full Body Harness (cont’d)

DETAILED DESCRIPTION

Ref.	Product name	Sizes	Weight						
			g	oz	A - Chest (cm)	A - Chest (cm)	C - Legs (cm)	C - Legs (in)	EN 12277/B
0657	BAMBINO	One-size	370	13.1	50-85	19,7-33,5	30-60	11,8-23,6	•

- Pre-Threaded Auto-Locking Buckles
- One size fits all
- Recommended for children 3 to 8 years old not exceeding 85 lbs.

Manufacturer’s website: https://www.camp.it/m/us/us/outdoor/product/134

Technical notice/manual: CAMP Bambino Childrens Full Body Harness - technical notice.pdf

Item Name: Figure 8 Chest Harness

Item Colour: Black

Item Code: HARC-nnn

Item Name: Handheld UHF Radio

Item Colour: Black

Item Code: UHF-nnn

Item Name: Folding Cart

Item Colour: Green / Black

Item Code: CART-nnn

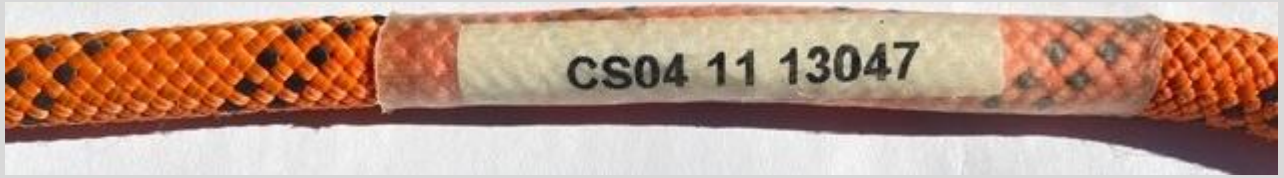

Item Name: Static Ropes (11mm) – Capital Safety

Item Colour: Various

Item Code: CSnn 11 nnnnn

Rope number is read as follows:

CS – manufacturer code
04 – sequence number
11 – rope thickness (11mm)
13 – year of manufacture
047 – length of rope (47m)

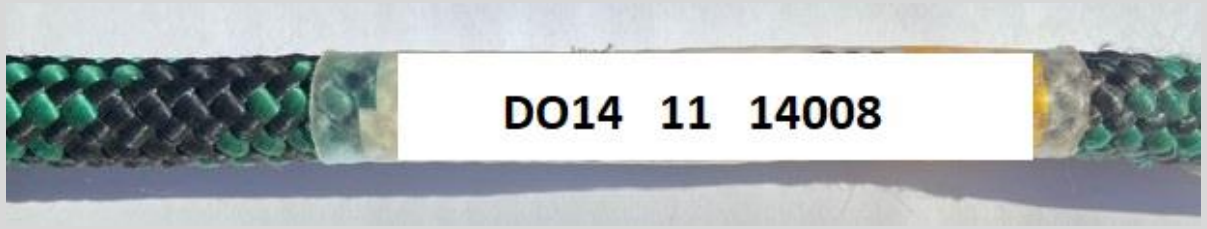

Item Name: Static Ropes (11mm) – Donaghys

Item Colour: Various

Item Code: DOnn 11 nnnnn

Rope number is read as follows:

DO – manufacturer code
02 – sequence number
11 – rope thickness (11mm)
14 – year of manufacture
020 – length of rope (20m)

Item Name: Static Ropes (11mm) – National Braiding Industries

Item Colour: Various

Item Code: NBnn 11 nnnnn

Rope number is read as follows:

NB – manufacturer code
08 – sequence number
11 – rope thickness (11mm)
15 – year of manufacture
043 – length of rope (43m)

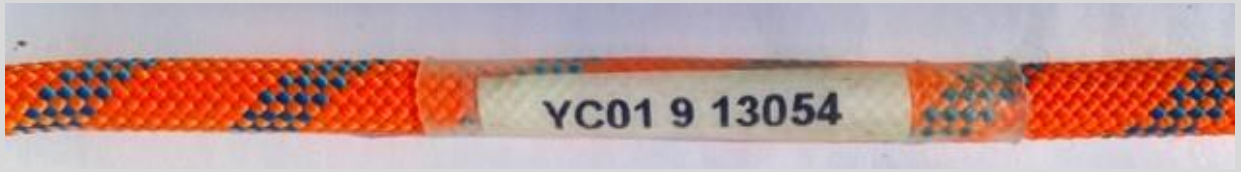

Item Name: Static Ropes (9mm) – Yale Cordage

Item Colour: Various

Item Code: YCnn 9 nnnnn

Rope number is read as follows:

YC – manufacturer code
01 – sequence number
9 – rope thickness (9mm)
13 – year of manufacture
054 – length of rope (54m)

Item Name: Static Ropes (11mm) – Yale Cordage

Item Colour: Various

Item Code: YCnn 11 nnnnn

Rope number is read as follows:

YC – manufacturer code
08 – sequence number
11 – rope thickness (11mm)
13 – year of manufacture
015 – length of rope (15m)